WIN NEW BUSINESS WITH METAL 3D PRINTED TOOLING: A DISCUSSION WITH WESTEC PLASTICS AND MANTLE

Daniel Miller - Mantle
Tammy Barras - Westec Plastics

MANTLE

WESTEC Plastics Corporation

MANTLE'S GOAL

Automate your toolmaking

by **printing** precision mold components with unmatched **accuracy**, **surface finish**, and **tool steel performance**

that **eliminate** the time and cost of operations like programming, rough milling, and EDM.

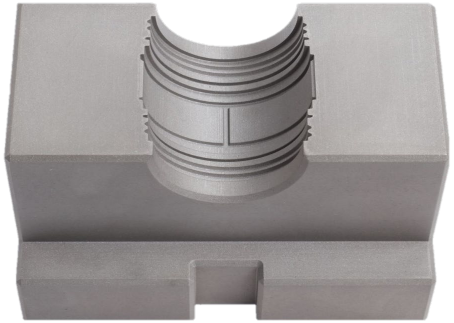

TRUESHAPE TECHNOLOGY

The solution includes:

HARDWARE
SOFTWARE
TOOL STEELS

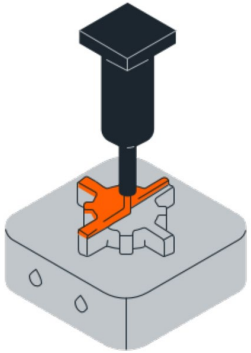

PRINT

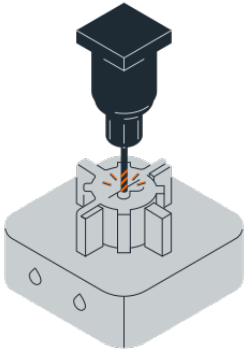

SHAPE

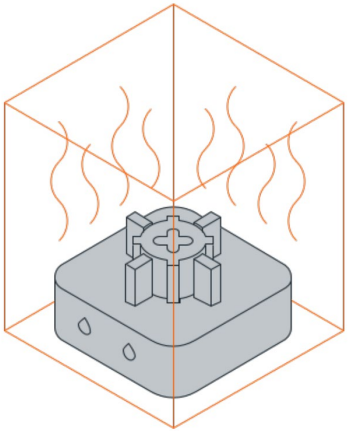

SINTER

MANTLE TECHNOLOGY DELIVERS

1. SINKER EDM FINISH
1-3 um Ra / Charmilles 26 / D2

2. BEST IN CLASS PRECISION
+/- .001” per inch

3. FINE FEATURES
.003” corner radii (EDM sharp)

4. STABLE, DURABLE TOOL STEELS
H13 Tool Steel

5. EASE OF USE
No programming required

6. CONFORMAL COOLING

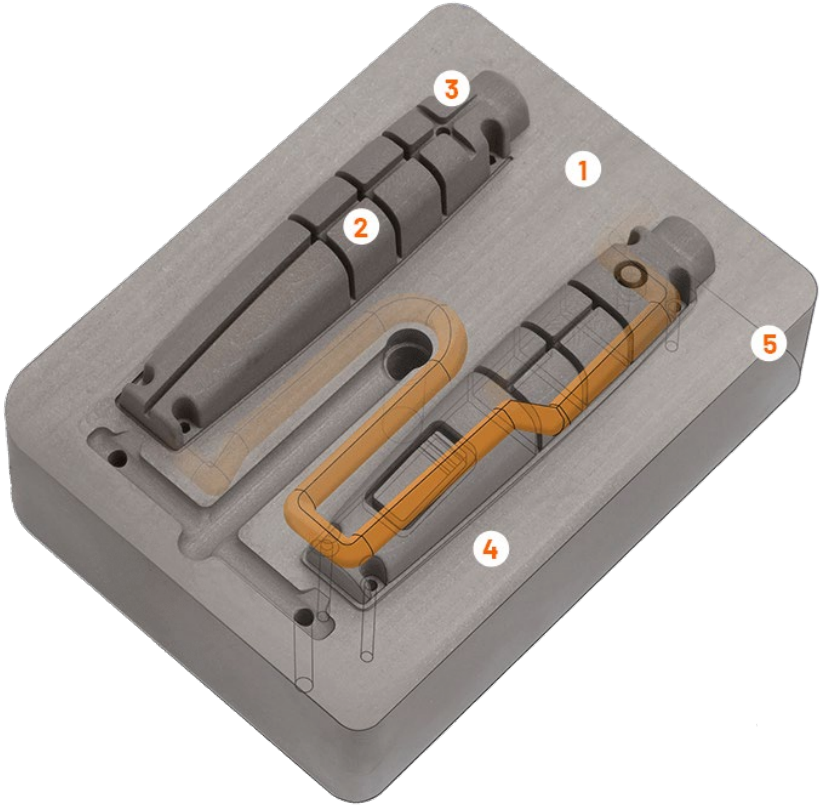

REAL-WORLD RESULTS

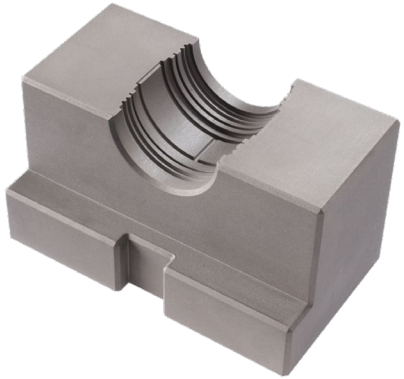

Hypertherm®

Slide for packaging housing

75%
Less cost

75%
Less time

Global Appliance Manufacturer

Production tool for dishwasher part

67%
Less cost

71%
Less time

Tessy

Production tool for deodorant packaging.

60%
Less cost

3.3M+
Parts produced

UNIQUE NEEDS OF TOOLING INDUSTRY

Most metal 3D printing was not designed with tooling in mind.

Tooling requires a solution that is:

- Highly accurate
- Extremely durable & stable materials
- Cost and time effective
- Easy to use and implement

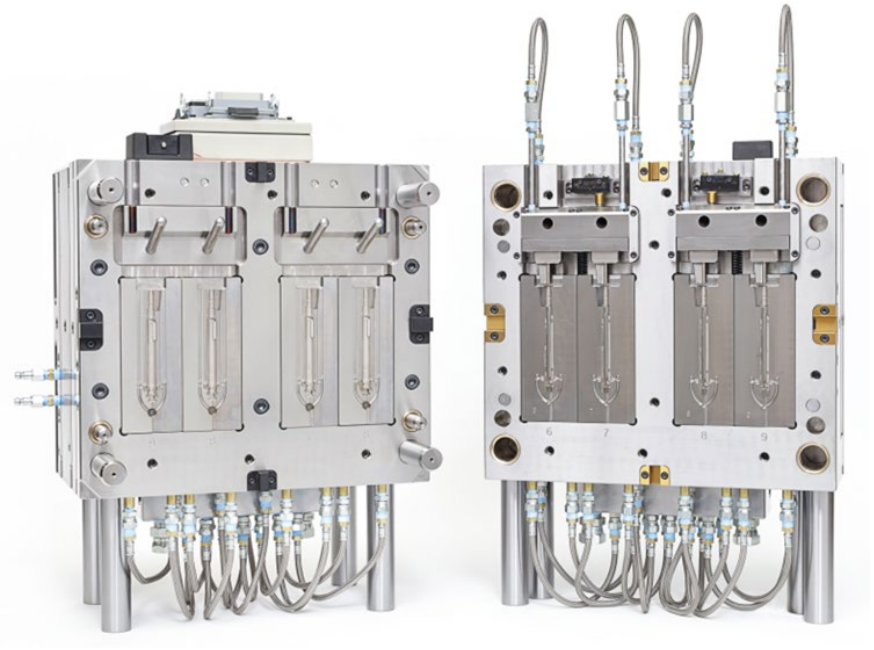

METAL 3D PRINTING LANDSCAPE FOR TOOLING
POWDER BED FUSION (PBF)

Advantages:

- High rates of deposition
- Conformal cooling

Disadvantages:

- Extensive post processing
- Loose metal powder
- High cost of implementation
- Difficult to use

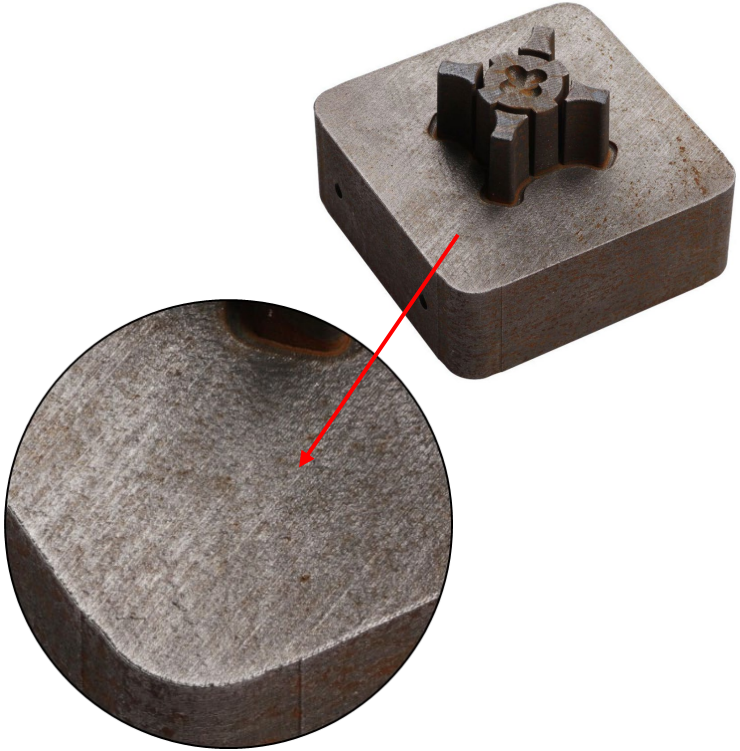

THE ONLY 3D PRINTER DESIGNED FOR TOOLING

TRUESHAPE TECHNOLOGY
METAL PASTE

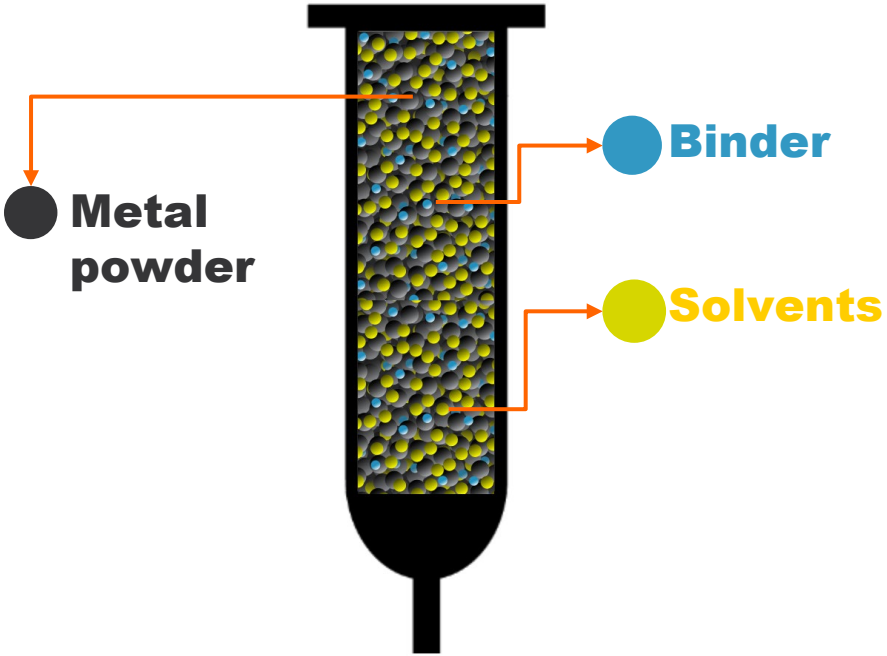

Flowable Metal Paste

- Metal particles (various sizes)
- Binder
- Solvents

TRUESHAPE TECHNOLOGY

PRINTER

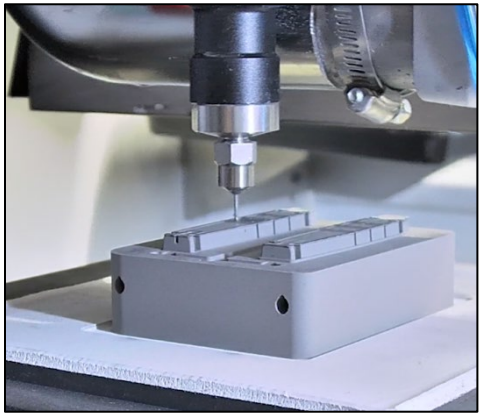

PRINT

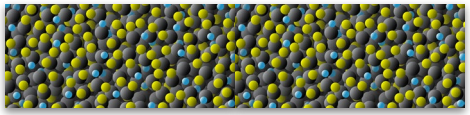

- Metal powder
- Solvents
- Binder

- Easily flowable
- No loose powder

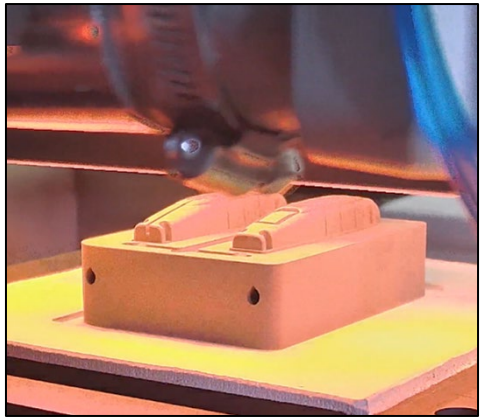

DRY

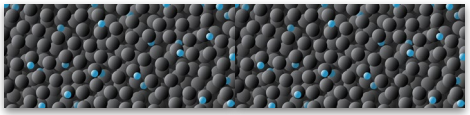

- Metal powder
- Binder

- Solvent removed
- High green body density

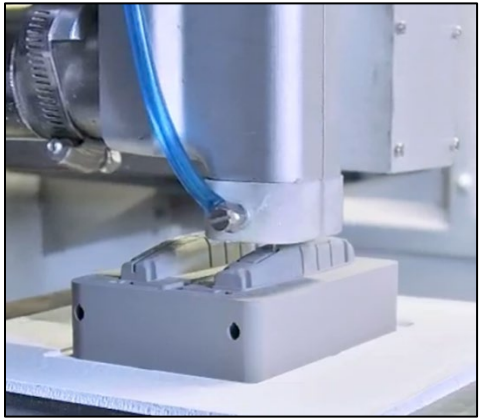

SHAPE

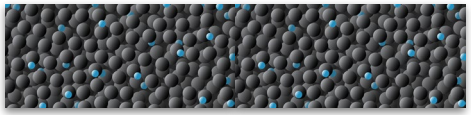

- Metal powder
- Binder

- Easily machined
- Surface finish improved

TRUESHAPE TECHNOLOGY

PRINTER

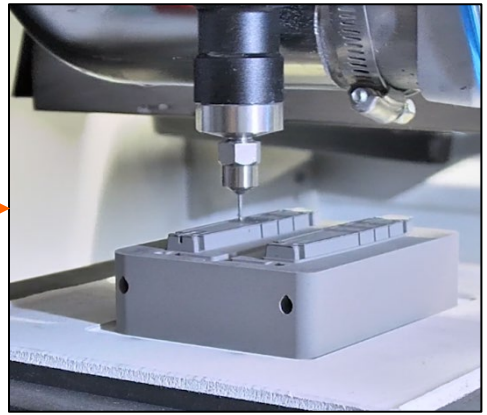

PRINT

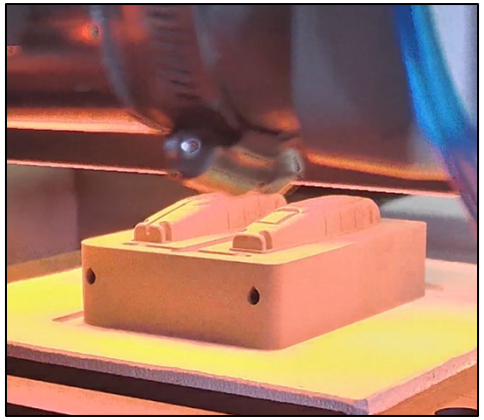

DRY

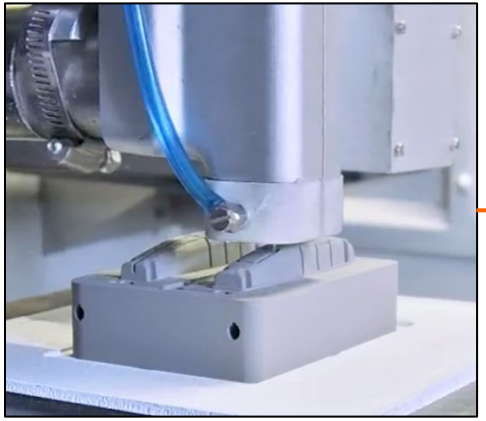

SHAPE

REPEATED EVERY LAYER

TRUESHAPE TECHNOLOGY
FURNACE

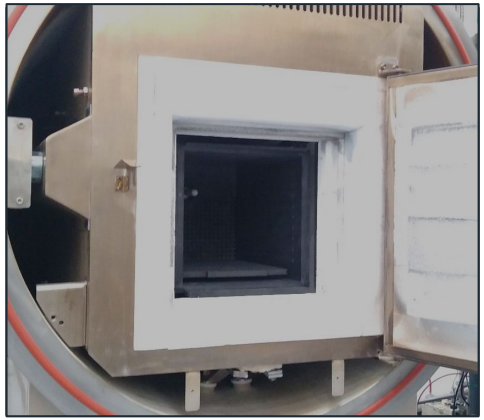

SINTER

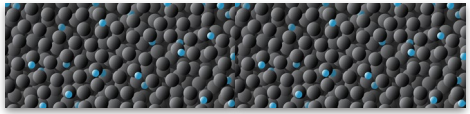

Metal powder

- Batch, automated sinter
- Vacuum sintering
- <9% shrink

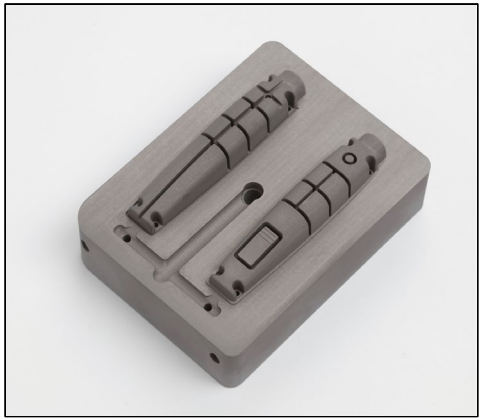

FINAL PART

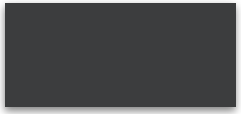

Tool Steels
- H13
- P2X (P20)

Dense steel

- 96% dense
- Isotropic material properties
- No residual stresses

PRINT AND SHAPE

PRINT
DRY
SHAPE

SINTER

SINTER

COMPATIBLE WITH TRADITIONAL TOOLMAKING OPERATIONS

WITHOUT CHANGES TO STANDARD OPERATING PROCEDURES

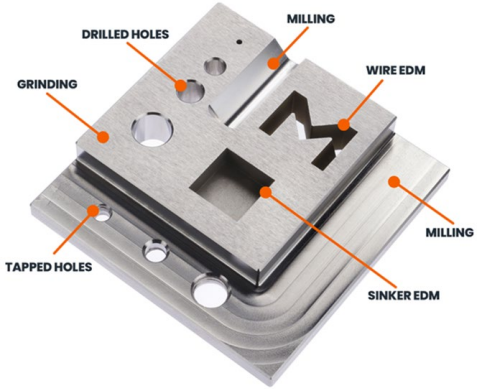

MACHINING

Milling, drilling, grinding, tapping
EDM (sinker and wire)

POLISHING

Achieved A2 finish

TEXTURING

Chemical etch
Deep chemical etch
Laser etch

WELDING

Laser
TIG
No halo effect

WESTEC PLASTICS

Tammy Barras
President, Westec Plastics

MANTLE

WESTEC
Plastics Corporation

INTRODUCTION TO WESTEC PLASTICS

Custom injection molding services for over 54 years from their Livermore, CA facility, with a strong focus on quality and customer satisfaction.

Range of Tooling Services:

- Design for manufacturability
- Mold flow analysis
- Mold design and prototyping,
  with a full-service in-house tool room.
- **Mantle metal 3D printing system**

WESTEC
Plastics Corporation

INTRODUCTION TO WESTEC PLASTICS

Production Capabilities include:

- 23 injection molding machines with sizes ranging from 28 to 610 tons
- IQMS Real-time monitoring
- ISO Class 6, 7, & 8 clean room facilities for medical and other cleanliness-sensitive applications
- Secondary operations: pad printing, ultrasonic welding, vibration welding, assembly, and more

INTRODUCTION TO WESTEC PLASTICS
MANTLE METAL 3D PRINTING

Mantle allows us to:

- Free up experienced toolmakers' time to focus on critical specialized steps like finishing, tool repair, modifications, and maintenance
- Produce production-ready mold cavity and core inserts in some cases, just days, as opposed to 10 to 12 weeks when outsourcing.
- Reduces costs

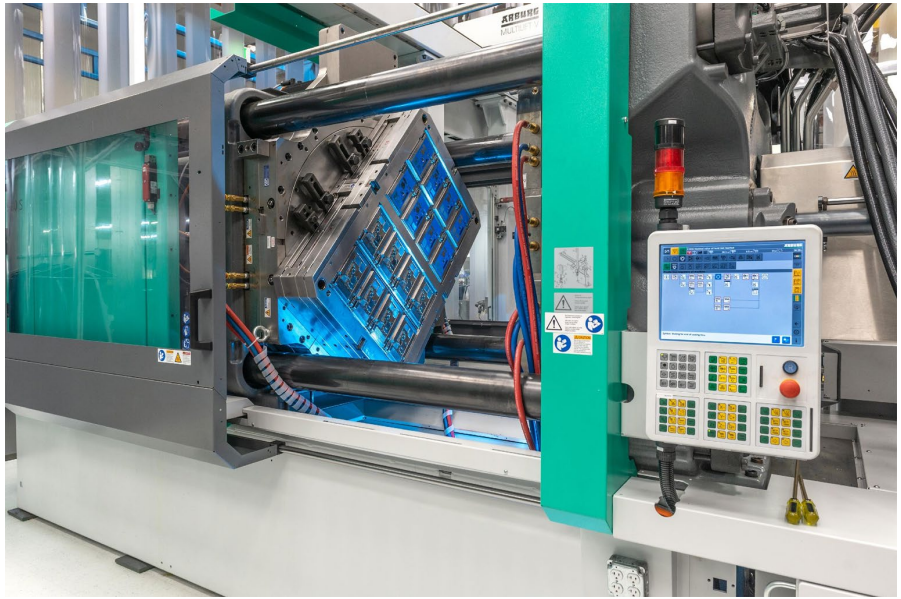

WESTEC Plastics Corporation

MEDICAL COMPONENT

Injection mold core and cavity

- Was in the process of building a multi cavity tool for a medical device customer
- Customer wanted to make changes to the design
- Westec needed to validate the design with a single cavity tool before proceeding with the build the production of a higher cavity tool

WESTEC
Plastics Corporation

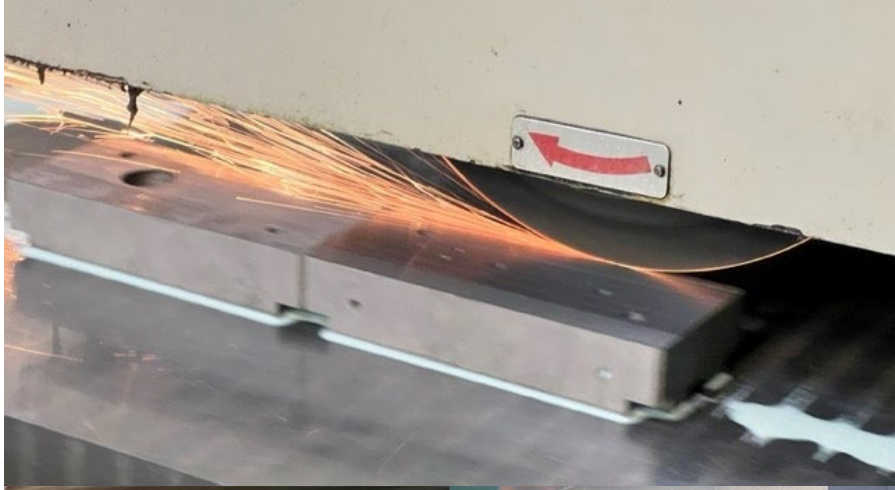

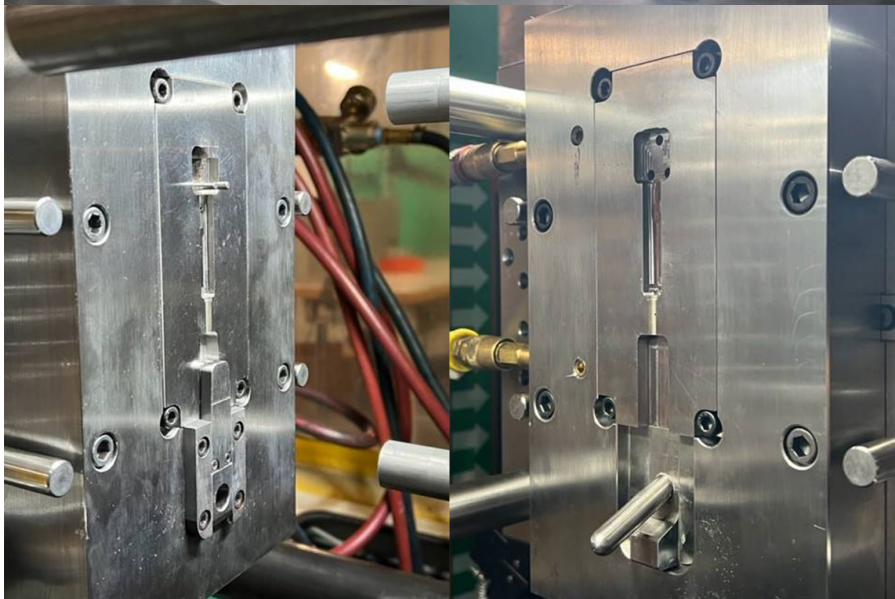

MEDICAL COMPONENT

Injection mold core and cavity

Key metrics:

- **50% cost savings**
- Total active operations time reduced from **40 hours to 10 hours**
- H13 tool steel
- Injected TPE

WESTEC Plastics Corporation

MEDICAL MANUFACTURING AID

- The part was originally fabricated in acrylic via injection molding followed by machining to improve the tolerance and surface finish
- Thick, non uniform section in the molded part led to molding challenges
- Gracon made part design changes and see if they could mold the part for their customer and remove the finish machining

WESTEC Plastics Corporation

GRACON MANUFACTURING LLC

MEDICAL MANUFACTURING AID

Printed injection mold core and cavity with Mantle in H13 tool steel

- 60 hour print
  - Core and cavity printed together
- 36 hour sinter

- **5 days from design to shipped H13 inserts**

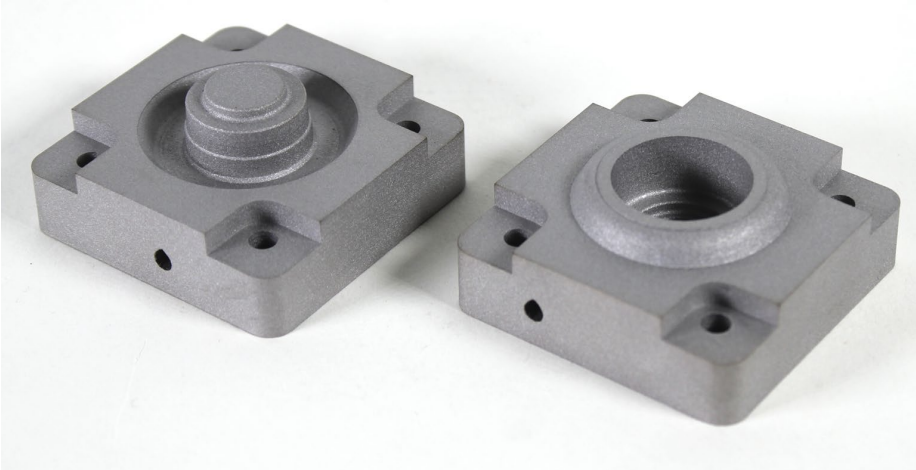

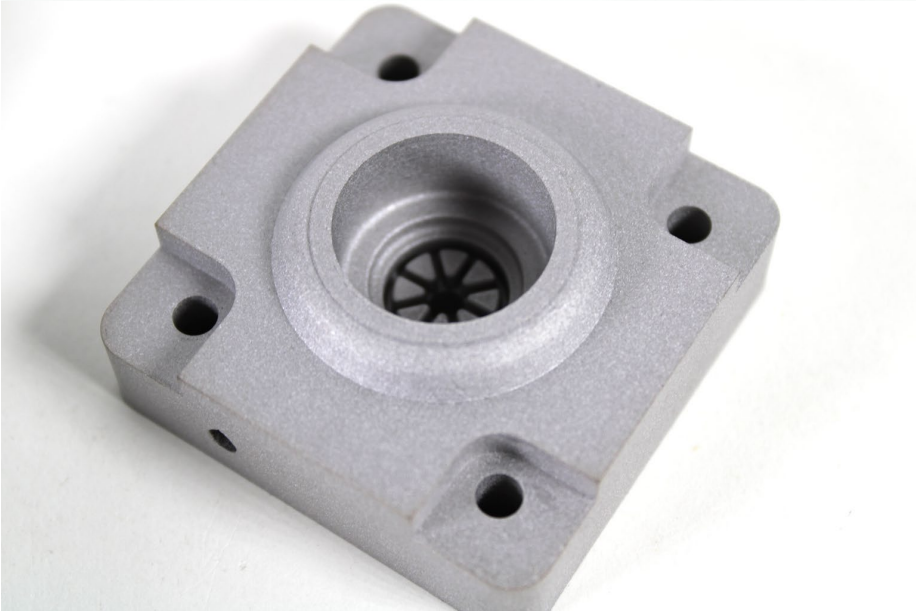

WESTEC Plastics Corporation

GRACON MANUFACTURING LLC

MEDICAL MANUFACTURING AID

Tool steel inserts in just days:

- We estimated the inserts would take 3 weeks to build traditionally (without Mantle)
- **Insert lead time reduced from 3 weeks to 5 days**

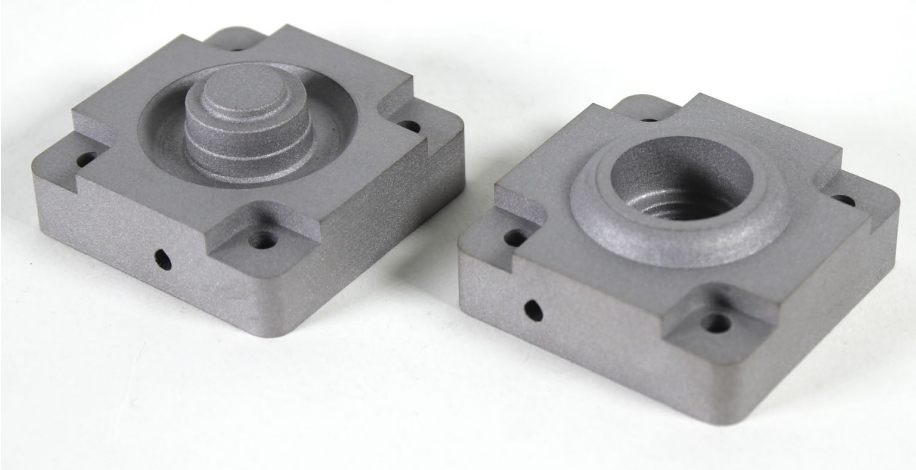

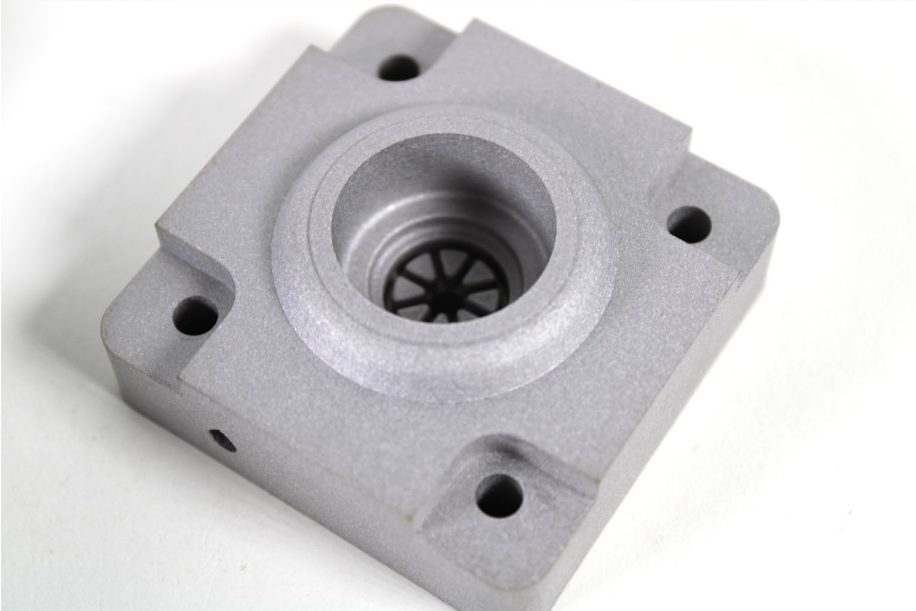

WESTEC Plastics Corporation

GRACON MANUFACTURING LLC

MEDICAL MANUFACTURING AID

Solving labor challenges:

- Only 2 hours of active labor time required
  - The printer ran lights out over the weekend

- **Expands our tool shops capacity without needing additional toolmakers**

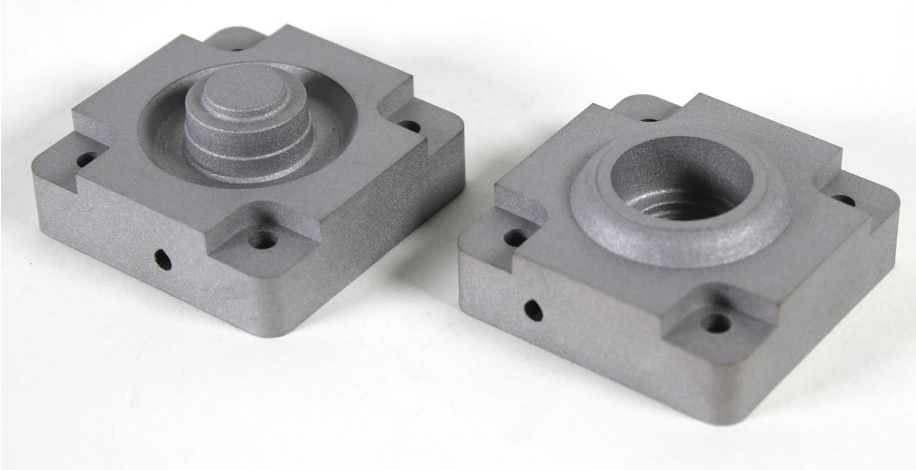

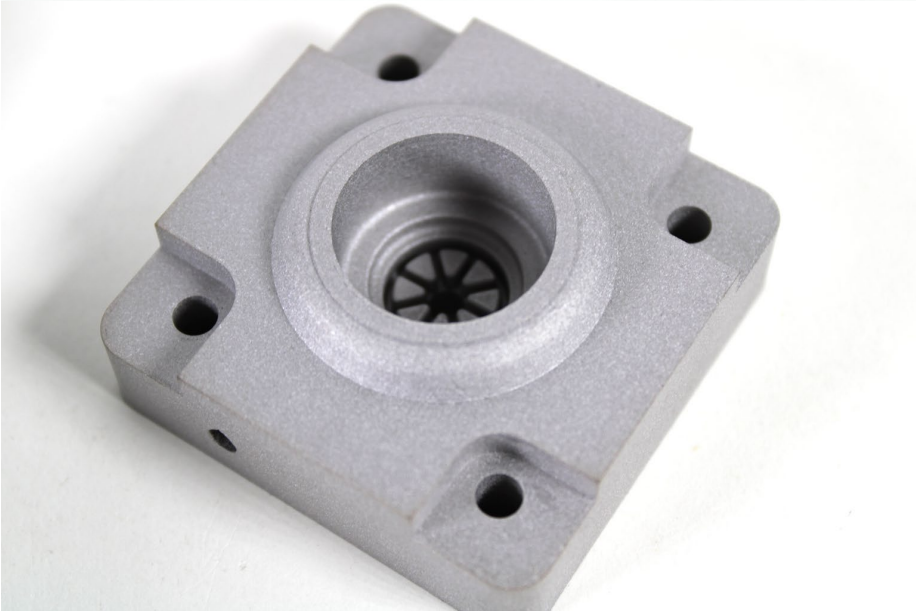

WESTEC Plastics Corporation

GRACON MANUFACTURING LLC

HOW TOOLMAKING TIME WAS REDUCED

CONVENTIONAL:

WITH MANTLE:

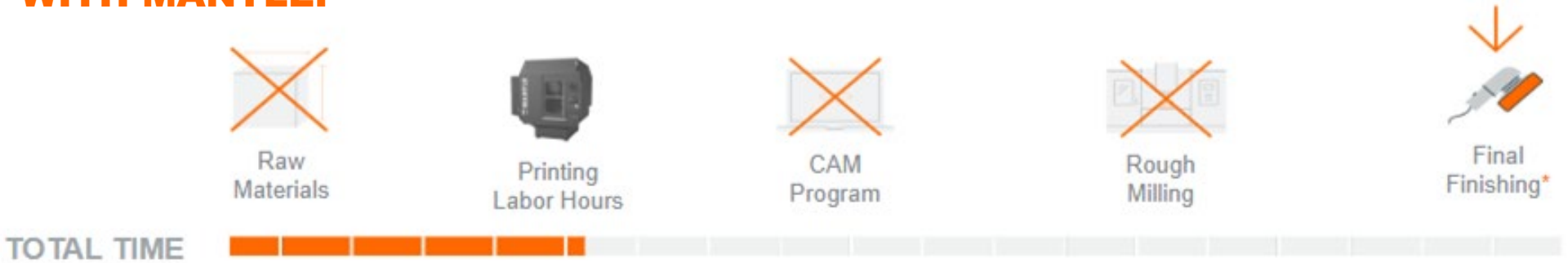

LEAD TIME: 3 WEEKS → 5 DAYS

TOOLMAKER TIME: 30 HOURS → 8 HOURS

MEDICAL MANUFACTURING AID

Conformal cooling:

- “Why not” mentality since already justified printing with lead time and cost savings

- Conformal cooling reduces cycle time and can improve molded part quality

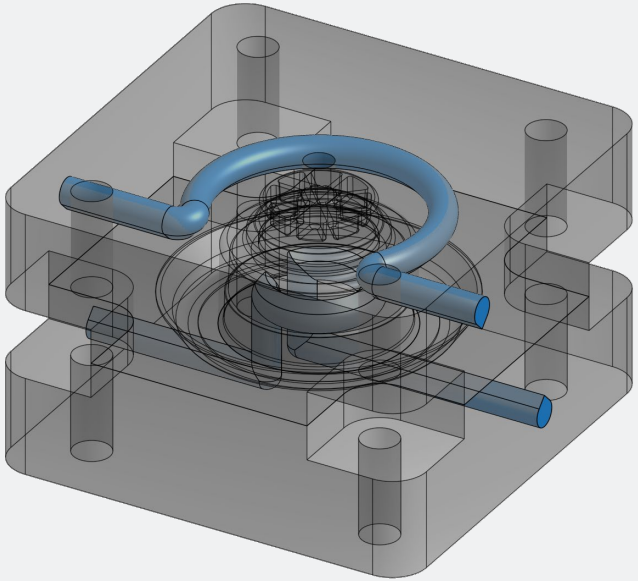

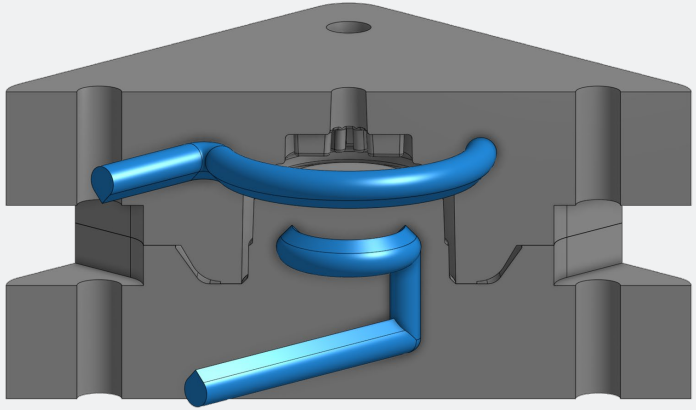

WESTEC Plastics Corporation

GRACON MANUFACTURING LLC

THANK YOU!

QUESTIONS?

Daniel Miller
daniel.miller@mantle3d.com

MANTLE

BACKUP

MANTLE

TOOL STEELS

P2X: P20 Equivalent Tool Steel

32 HRC

H13 Tool Steel

HRC 42 As Sintered
HRC > 50 after Heat Treatment

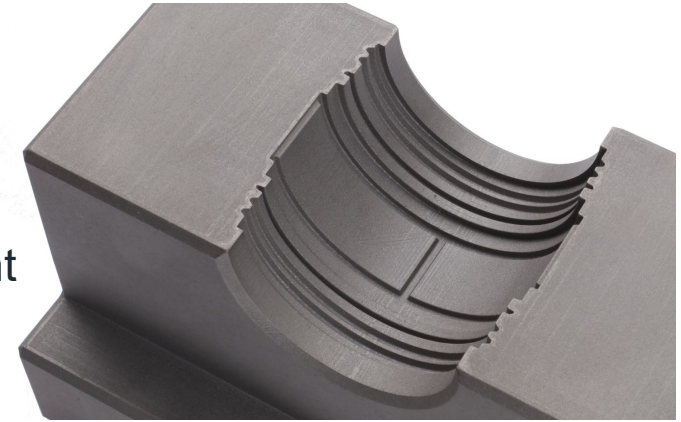

STABLE TOOL STEELS AFTER SECONDARY OPERATIONS

- Mantle's tool steels remain stable during standard toolmaking operations
- Little to no movement with machining, grinding, EDM, and other operations
- No residual stresses after sintering
- Minimal, consistent growth during heat treatment

"We took a printed block of steel, cut away 75% of it, and were able to hold a .0007" tolerance."

Edward Graff,
Director of Engineering, Westminster Tool

COMPATIBLE WITH TRADITIONAL OPERATIONS

WITHOUT CHANGES TO STANDARD OPERATING PROCEDURES

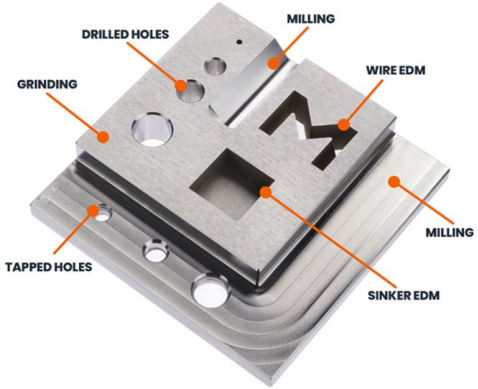

MACHINING

Milling, drilling, grinding, tapping

EDM (sinker and wire)

POLISHING

Achieved A2 finish

TEXTURING

Chemical etch

Deep chemical etch

Laser etch

WELDING

Laser

TIG

No halo effect

TOOL STEEL DURABILITY DEODORANT THUMBWHEEL

Production injection mold core

- **Over 1.65 million cycles** and counting with no signs of wear on the printed tool
- Printed inserts 60% faster than conventional machined inserts
- Printed H13 and P2X inserts have proven to be as accurate and durable as traditionally S7 steel machined inserts

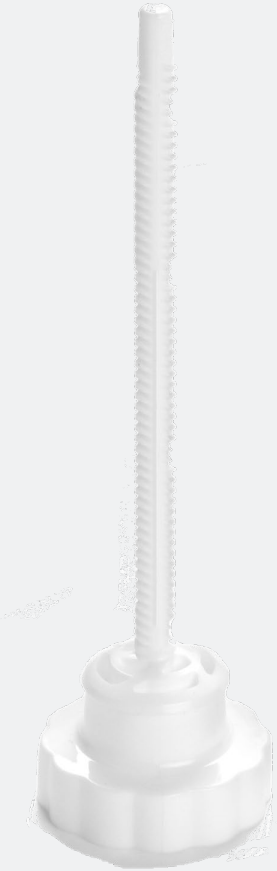

REDUCED LEAD TIME DENTAL GUIDE

- **40% lead time reduction**
- Total operations time reduced from **200 hours to 110 hours**
- EDM operation time reduced from 100 hours to 27 hours
- Successfully overmolded 60% GF nylon

FATHOM

DIGITAL MANUFACTURING. **REIMAGINED.**

FINAL EDM BURN

FATHOM
DIGITAL MANUFACTURING. REIMAGINED.

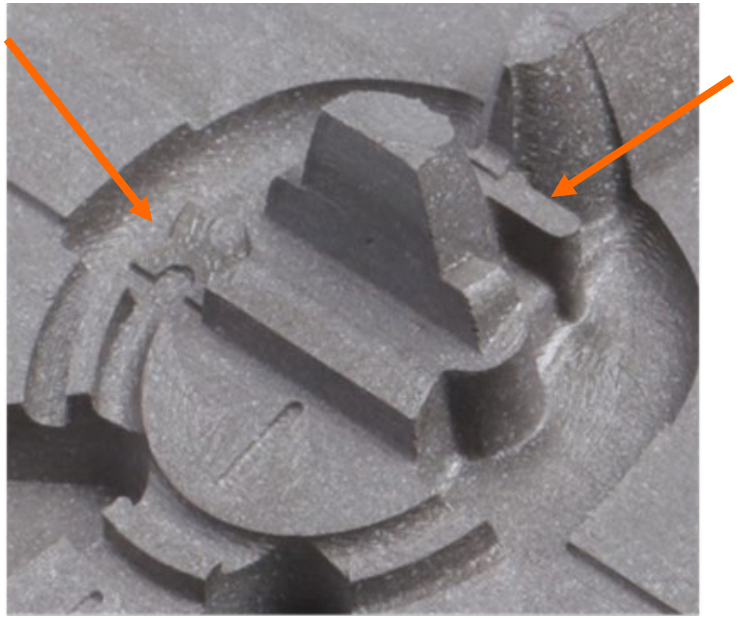

INSERT AS PRINTED

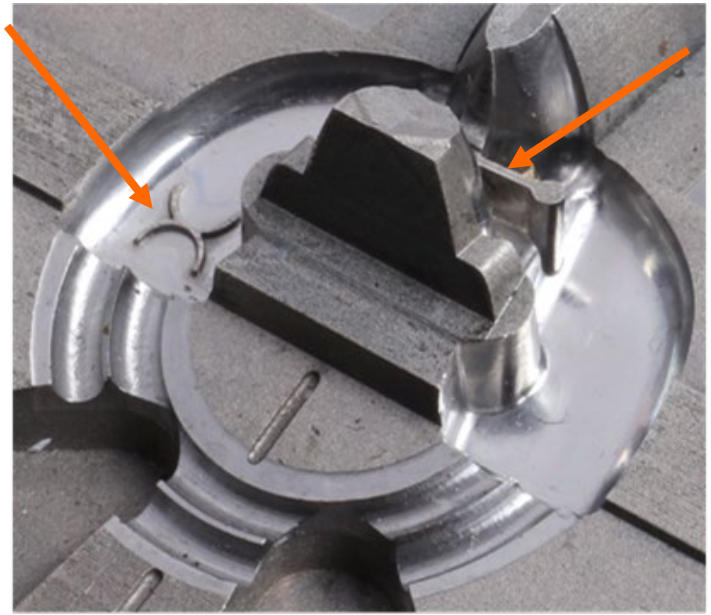

INSERT AFTER EDM AND POLISH

40% LEAD TIME REDUCTION EVEN WITH POST PRINT EDM WORK

CONFORMAL COOLING

MANTLE

CONFORMAL COOLING

Without a time or cost penalty

Reduce cycle time:

- Faster cooling times & increase press capacity

Lower part cost:

- More parts faster & reduce tool cavitation

Increase part quality:

- More controlled shrinkage
- Reduce total part warpage
- Precisely address trouble areas with cooling
- Better shot-to-shot dimensional consistency

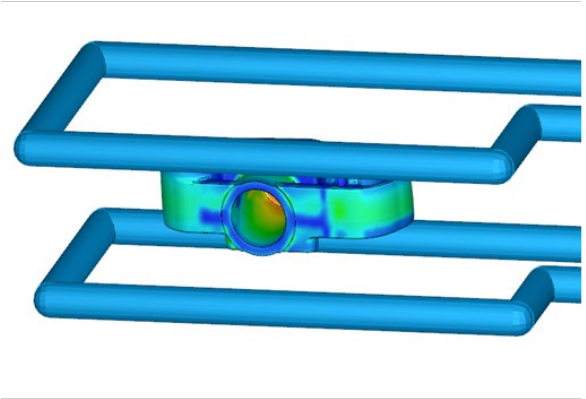

TRADITIONAL

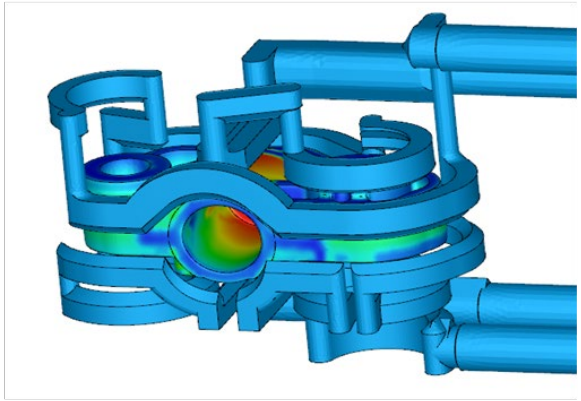

CONFORMAL

AUTOMOTIVE COMPONENT

Injection mold core and cavity

- **Conformal cooling reduced cycle time by 25%**
- Saved 25% attended manufacturing hours vs. traditional
- +/- 0.002” on the printed 3" x 3" x 2" insert

Westminster Tool

PROTOTYPE BOTTLE BLOW MOLD

H13 tool steel

- **9 days from design to completion**
- Conformal cooling used to
  - Remove heat related blushing
  - Lengthen life of tool to last through development molding 10,000+ shots
- Minimal machining required
  - Group top and bottom
  - Hardmill OD base and o-ring

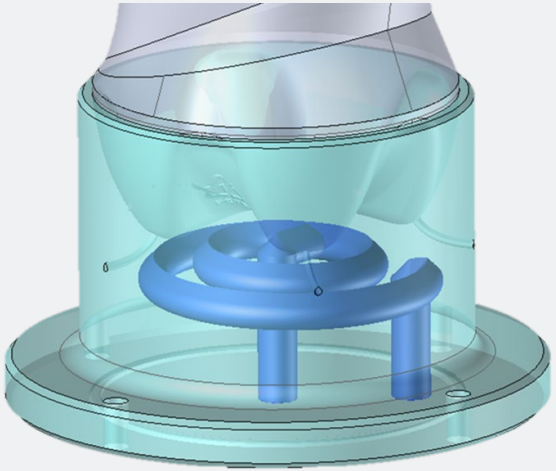

pepsi

Westminster Tool

WHICH TOOLS MAKE SENSE TO PRINT WITH MANTLE

MANTLE

WHAT TOOLS MAKE SENSE TO PRINT WITH MANTLE?

Tools requiring multiple machining setups or EDM operations to build traditionally

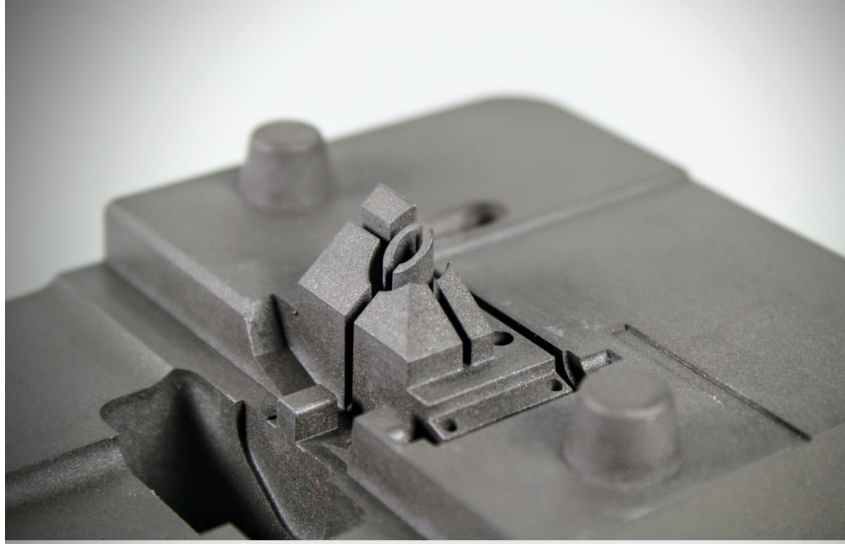

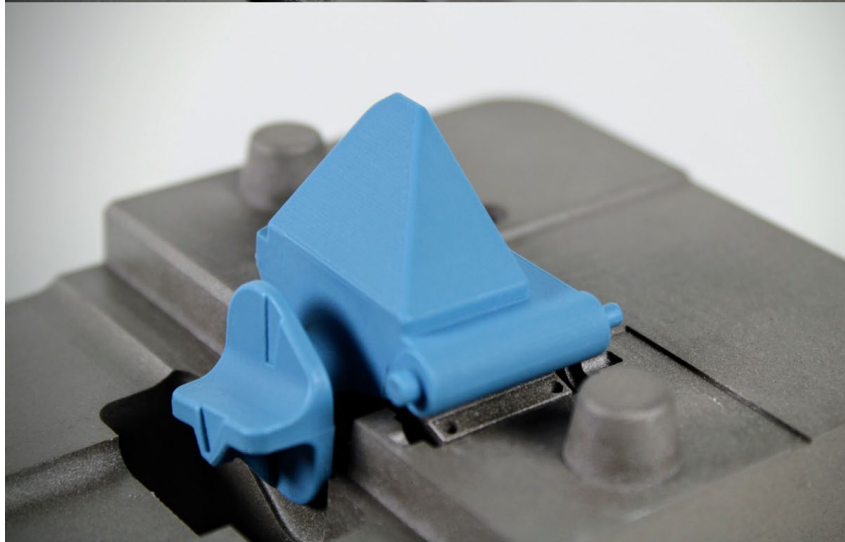

WHAT TOOLS MAKE SENSE TO PRINT WITH MANTLE?

Tools requiring multiple machining setups or EDM operations to build traditionally

Tools for molding challenging resins that can’t be molded with aluminum tools

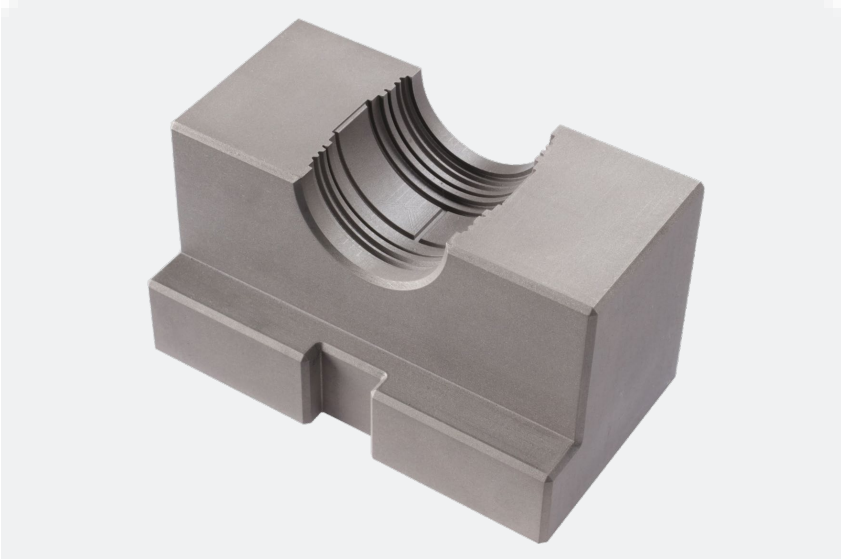

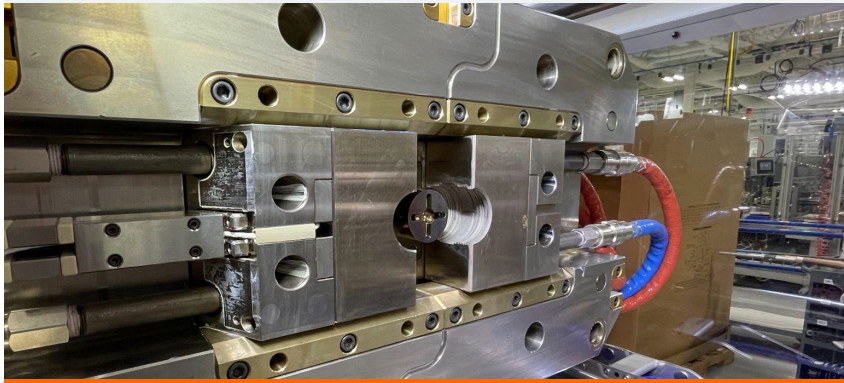

MANTLE INSERT MOLDING 30% GLASS FILLED PEEK PLASTIC AT 720°F AND TOOL AT 355°F.
Courtesy: Hypertherm

WHAT TOOLS MAKE SENSE TO PRINT WITH MANTLE?

Tools requiring multiple machining setups or EDM operations to build traditionally

Tools for molding challenging resins that can’t be molded with aluminum tools

Steel prototype tools for production-representative functional and process validation

WHAT TOOLS MAKE SENSE TO PRINT WITH MANTLE?

Tools requiring multiple machining setups or EDM operations to build traditionally

Tools for molding challenging resins that can’t be molded with aluminum tools

Steel prototype tools for production-representative functional and process validation

Tools that benefit from conformal cooling

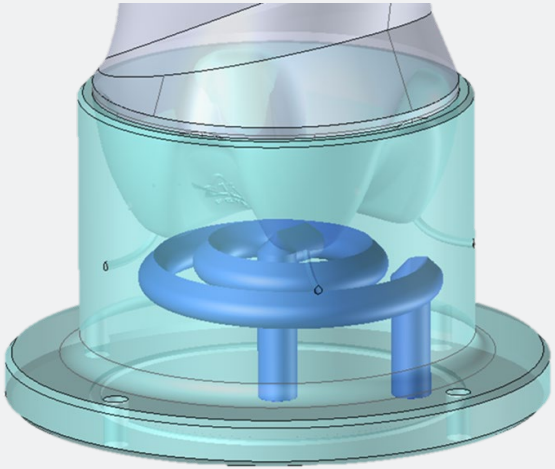

WHAT TOOLS MAKE SENSE TO PRINT WITH MANTLE?

Tools requiring multiple machining setups or EDM operations to build traditionally

Tools for molding challenging resins that can’t be molded with aluminum tools

Steel prototype tools for production-representative functional and process validation

Tools that benefit from conformal cooling

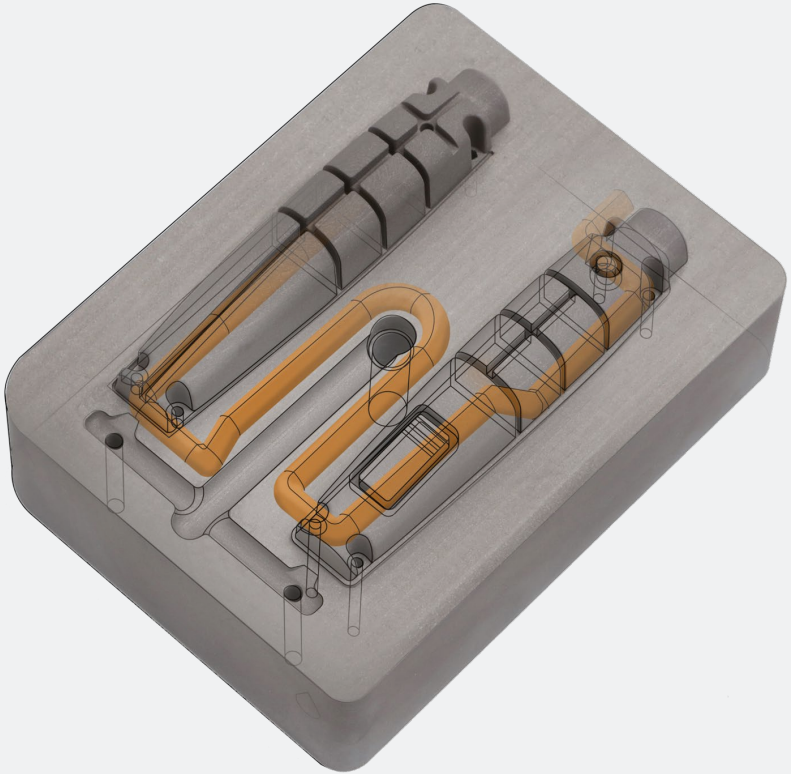

THANK YOU!

QUESTIONS?

Daniel Miller
daniel.miller@mantle3d.com

MANTLE